IF18-3 Exploded View

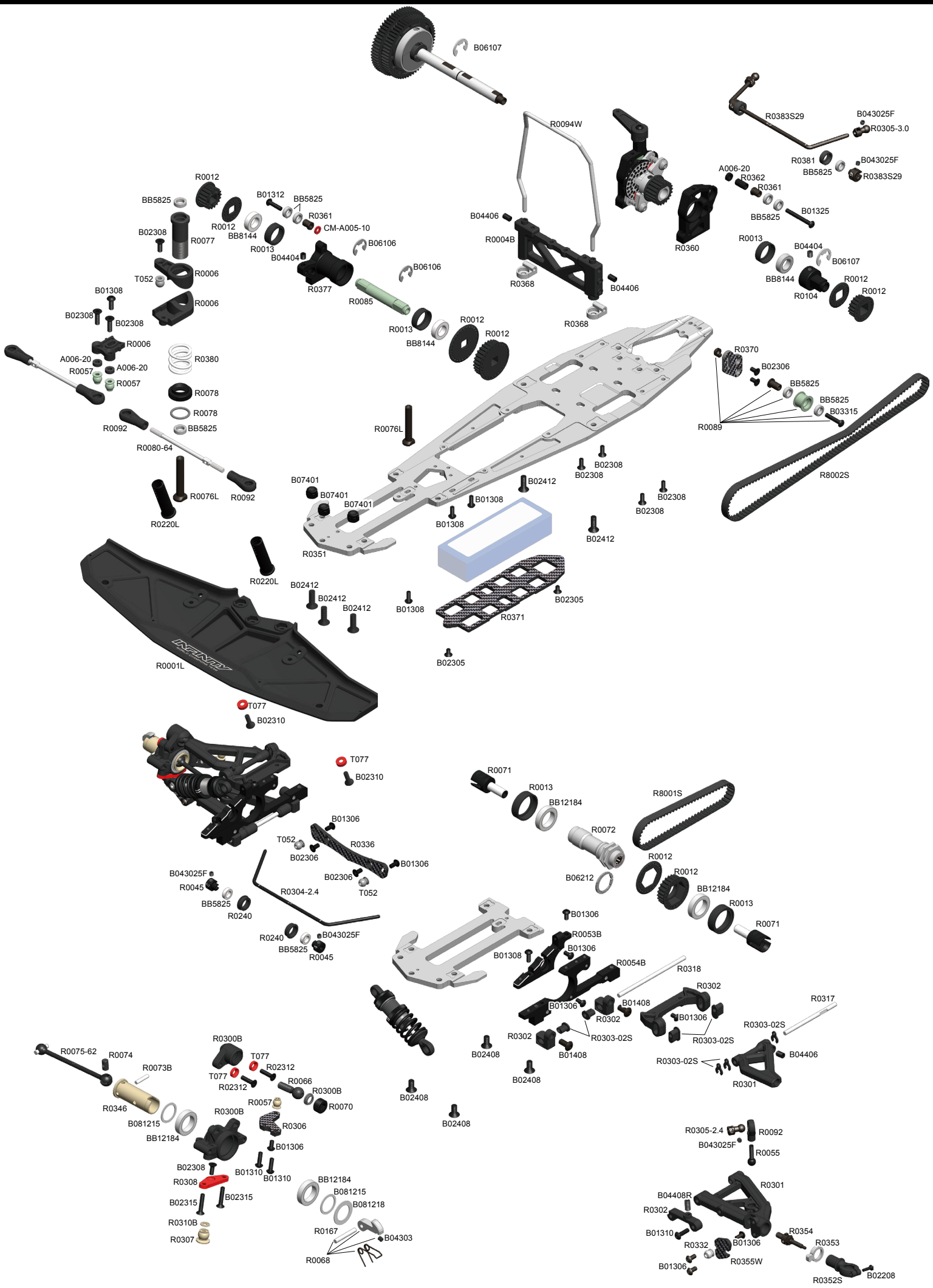

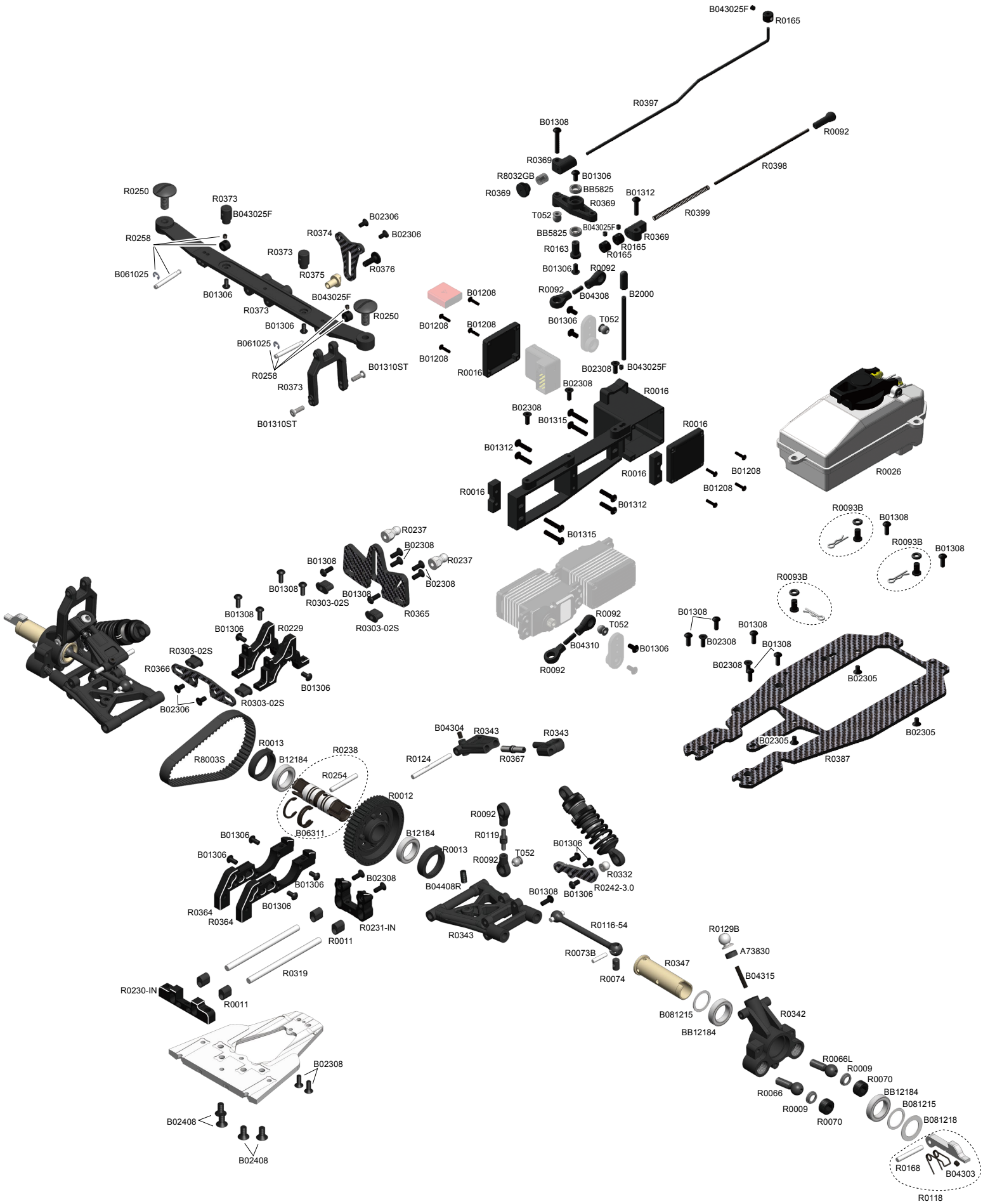
B043025F
R0165
R0397
B01308
R0092
R0369
R0398
R8032GB
B01306
BB5825
R0369
B01312
R0369
R0399
T052
BB5825
B043025F
R0369
R0163
R0165
R0165
B01306
R0092
R0250
R0373
B043025F
B02306
R0374
B02306
R0258
R0373
R0375
R0376
B061025
B01306
B043025F
R0373
R0250
B01306
B061025
R0258
B01310ST
R0373
B01310ST
B01208
B01208
B01208
B01208
R0016
R0092
B04308
B2000
B01306
T052
B02308
B043025F
B02308
R0016
B02308
B01315
R0016
B01312
R0016
B01208
R0016
B01208
B01312
R0026
B01315
R0093B
B01308
R0093B
B01308
R0237
B02308
B01308
R0237
B01308
B02308
B01308
R0303-02S
R0365
R0303-02S
B01308
B01306
R0229
R0303-02S
R0366
B01306
B02306
R0303-02S
R0092
T052
B04310
B01306
R0092
B01308
B01308
B02308
B01308
B02308
B02305
B02305
B02305
R0387
R8003S
R0013
B12184
R0238
R0254
R0012
B06311
B04304
R0343
R0343
R0124
R0367
B01306
B01306
B01306
B01306
R0364
R0364
B12184
R0013
B02308
B04408R
R0343
R0092
R0119
R0092
T052
B01306
R0332
B01306
R0242-3.0
B01308
B01306
R0231-IN
R0011
R0116-54
R0073B
R0074
R0129B
A73830
R0347
B04315
R0319
R0230-IN
R0011
B081215
BB12184
R0342
B02308
B02408
B02408
R0066L
R0009
R0070
R0066
BB12184
R0009
B081215
R0070
B081218
R0168
B04303
R0118

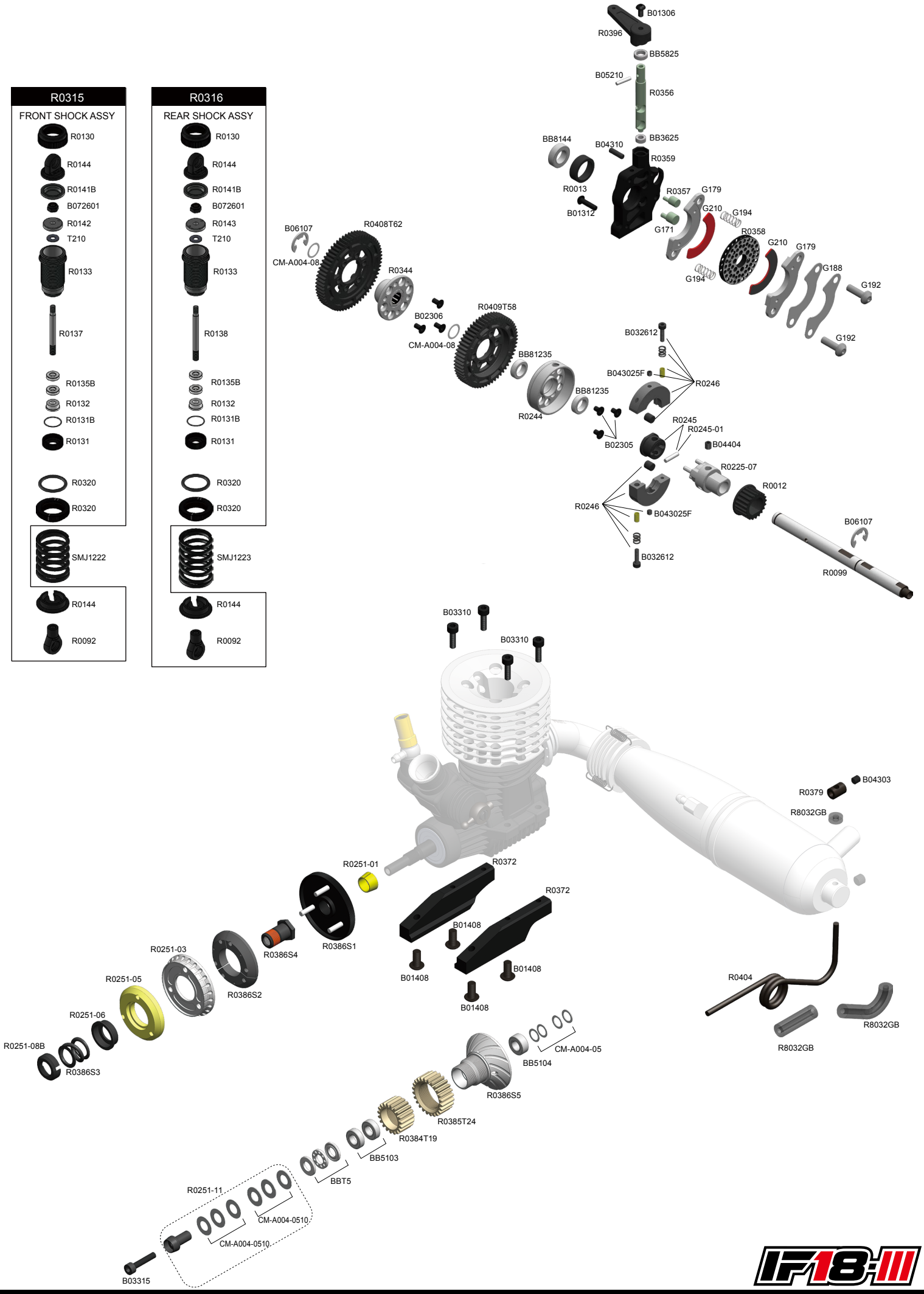
R0315
FRONT SHOCK ASSY
R0130
R0144
R0141B
B072601
R0142
T210
R0133
R0137
R0135B
R0132
R0131B
R0131
R0320
R0320
SMJ1222
R0144
R0092
R0316
REAR SHOCK ASSY
R0130
R0144
R0141B
B072601
R0143
T210
R0133
R0138
R0135B
R0132
R0131B
R0131
R0320
R0320
SMJ1223
R0144
R0092
B01306
R0396
BB5825
B05210
R0356
BB3625
BB8144
B04310
R0359
R0013
B01312
R0357
G179
G210
G194
G171
R0358
G210
G179
G188
G194
G192
G192
B06107
CM-A004-08
R0408T62
R0344
B02306
CM-A004-08
R0409T58
BB81235
R0244
BB81235
B02305
B032612
B043025F
R0246
R0245
R0245-01
B04404
R0225-07
R0012
R0246
B043025F
B032612
B06107
R0099
B03310
B03310
B04303
R0379
R8032GB
R0251-01
R0372
R0372
B01408
B01408
B01408
B01408
R0386S1
R0386S4
R0251-03
R0386S2
R0251-05
R0251-06
R0251-08B
R0386S3
R0404
R8032GB
R8032GB
CM-A004-05
BB5104
R0386S5
R0385T24
R0384T19
BB5103
BBT5
R0251-11
CM-A004-0510
CM-A004-0510
B03315
IF18-III